Style 75 Structural - Aluminum Pole

Made in USA - Delaware

LL-DE-DA-S75

Style 75 Structural

4´´- 8´ to 18´ Standard Heights. Straight or Tapered, Smooth or Fluted Poles.
5-Year Limited Warranty.

PRODUCT INFORMATION		
Shaft	**Structural Base**	**Anchor Bolts**
Smooth or Fluted Tubing Uses 6061-T6 Aluminum Alloy Tapered Poles Use 6061-T6 Aluminum Alloy	A356 Alloy Sand Cast Aluminum, Four Bolt Base. Extra Large Access Cover & Grounding Lug Included	Standard With Each Pole: Includes Four $^{3}/_{4}$-10x25" Steel Hot Dip Galvanized Anchor Bolts; Each With Two Nuts, Two Flat Washers and One Lock Washer
Tenons	**Accessories**	**Finish**
T300 = Standard for Post Top ($2^{7}/_{8}$" OD x 3" Tall) **T355** = Standard for Shepherd's Crook Arms ($2^{7}/_{8}$" OD x 5.5" Tall) **SLV** = Male Sleeve Welded to Pole; Ready for Extension/Arm Set-Up (Consult Factory) **CAP** = Removable Cap, No Tenon **PF_** = Decorative Pole Top Finial (Optional Adder)	**GFIC** = Weatherproof GFI In-Use Cover, Cast Aluminum (Must Indicate Location- See Orientation Guide On Last Page) **GFIP** = Weatherproof GFI In-Use Cover, Plastic (Must Indicate Location- See Orientation Guide On Last Page) **DBS** = Direct Burial Shaft to Convert Pole to Embedded/Burial Installation. 48" Shaft with Anti-Rotational Fins Included **USB** = Dual USB Port (Must Indicate Location- See Orientation Guide On Last Page)	**Standard Finishes:** Black, High Gloss Black, Textured Black, White, High Gloss White, Dark Bronze, Bronze, Dark Green, Green, Gray, Silver Metallic **Premium Finishes:** Verde Patina, Pewter Patina, Silver Sparkle, Semi-Gloss or Matte Black Custom & Marine-Grade Finishes Available All RAL Colors Available

PLEASE NOTE: Contact the factory for TAPERED FLUTED poles. Expect an extended lead time.

©Lite Lume Corporation 2018
www.litelume.com
info@litelume.com
833.LED.LUME

LITELUME™ seeks to deliver the most advanced and efficient LED technology. Due to technology progression, specifications may change. We reserve the right to update product specifications without notice. Contact LITELUME™ for the most up-to-date data.

Style 75 Structural - Aluminum Pole

Made in USA - Delaware

DIMENSIONS

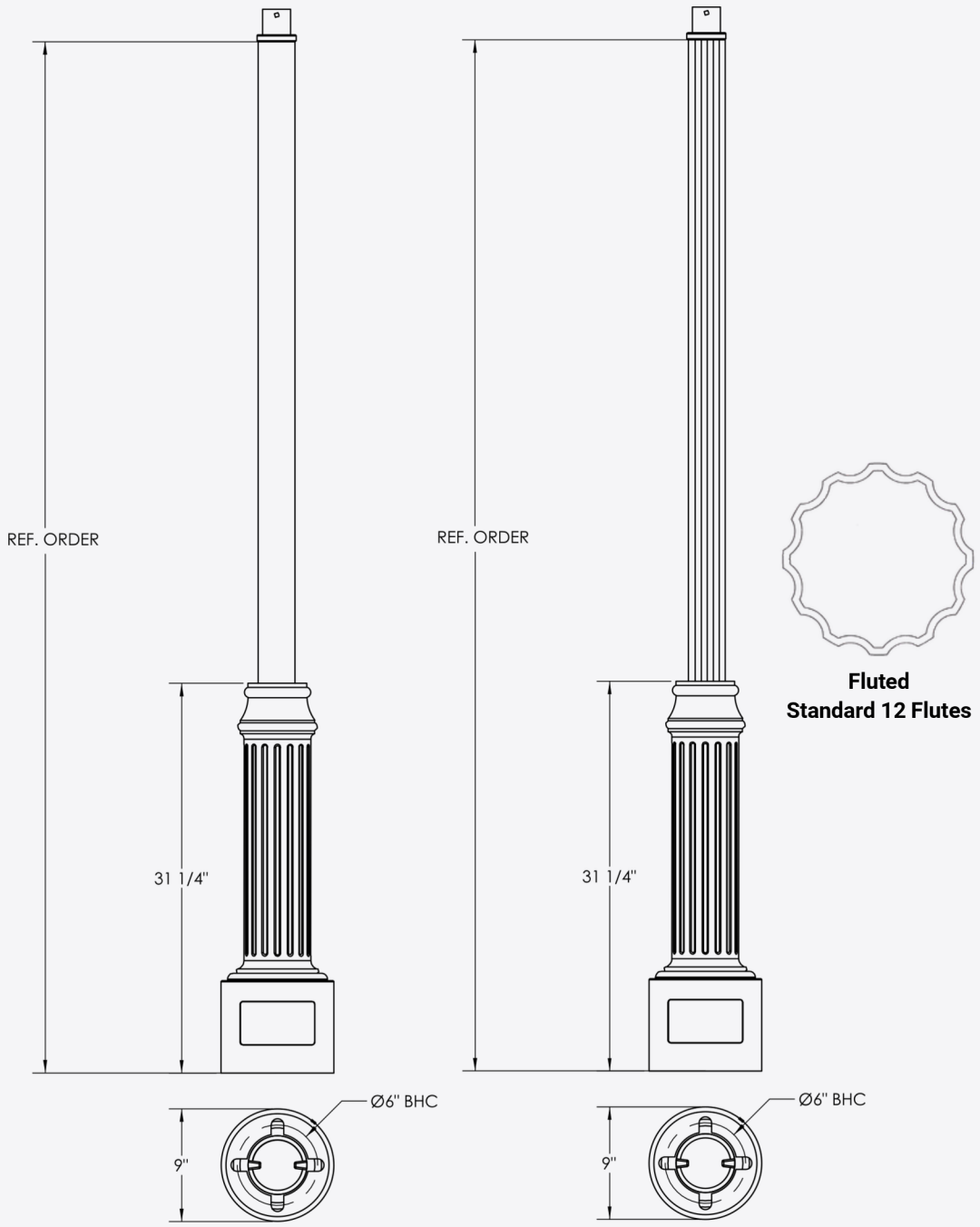

©Lite Lume Corporation 2018

www.litelume.com
info@litelume.com
833.LED.LUME

LITELUME™ seeks to deliver the most advanced and efficient LED technology. Due to technology progression, specifications may change. We reserve the right to update product specifications without notice. Contact LITELUME™ for the most up-to-date data.

Style 75 Structural - Aluminum Pole

Made in USA - Delaware

WIND LOADING & DIMENSIONAL DATA

ASCE7-05 WIND MAP

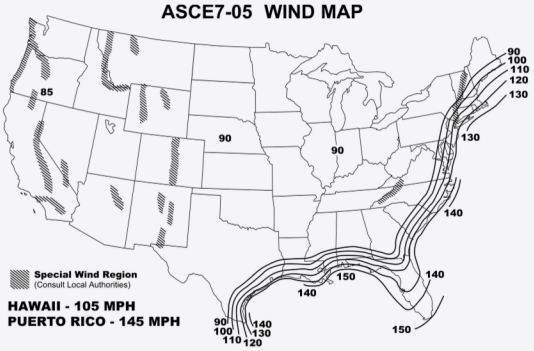

ALASKA REGION WIND MAP

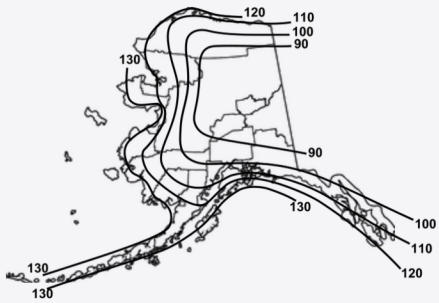

ASCE 7-05 Wind Map EPA Load Rating-3 Second Wind Gust

MODEL #	85	90	100	105	110	120	130	140	145	150
LL-DE-DA-S75-4-10-S-.125	14.10	12.60	10.20	9.20	8.30	6.90	5.90	5.00	4.70	4.40
LL-DE-DA-S75-4-10-F-.125	16.46	14.71	11.90	10.74	9.69	8.05	6.89	5.84	5.49	5.14
LL-DE-DA-S75-4-10-S-.188	20.70	18.60	15.10	13.70	12.40	10.40	8.90	7.70	7.10	6.70
LL-DE-DA-S75-4-10-F-.188	20.60	18.50	15.00	13.60	12.30	10.30	8.60	7.30	6.70	6.20
LL-DE-DA-S75-4-12-S-.125	10.20	9.10	7.20	6.40	5.80	4.70	4.00	3.40	3.10	2.90
LL-DE-DA-S75-4-12-F-.125	11.90	10.62	8.40	7.47	6.77	5.49	4.67	3.97	3.62	3.38
LL-DE-DA-S75-4-12-S-.188	15.30	13.70	11.00	9.90	9.00	7.40	6.30	5.40	5.00	4.70
LL-DE-DA-S75-4-12-F-.188	15.20	13.50	10.90	9.80	8.80	7.20	6.00	4.90	4.50	4.10
LL-DE-DA-S75-4-14-S-.125	7.70	6.70	5.20	4.60	4.10	3.20	2.70	2.20	2.10	1.90
LL-DE-DA-S75-4-14-F-.125	8.99	7.82	6.07	5.37	4.79	3.73	3.15	2.57	2.45	2.22
LL-DE-DA-S75-4-14-S-.188	11.80	10.40	8.30	7.40	6.60	5.40	4.60	3.90	3.60	3.30
LL-DE-DA-S75-4-14-F-.188	11.60	10.30	8.10	7.20	6.50	5.20	4.10	3.30	3.00	2.60
LL-DE-DA-S75-4-16-S-.125	5.80	5.00	3.70	3.20	2.80	2.10	1.70	1.40	1.20	1.10
LL-DE-DA-S75-4-16-F-.125	6.77	5.84	4.32	3.73	3.27	2.45	1.98	1.63	1.40	1.28
LL-DE-DA-S75-4-16-S-.188	9.20	8.10	6.30	5.60	4.90	3.90	3.30	2.70	2.50	2.30
LL-DE-DA-S75-4-16-F-.188	9.00	7.90	6.10	5.40	4.70	3.60	2.80	2.10	1.80	1.50
LL-DE-DA-S75-4-18-S-.125	4.30	3.60	2.50	2.10	1.70	1.10	0.80	0.60	0.50	NR
LL-DE-DA-S75-4-18-F-.125	5.02	4.20	2.92	2.45	1.98	1.28	0.93	0.70	0.58	NR
LL-DE-DA-S75-4-18-S-.188	7.20	6.20	4.70	4.10	3.50	2.70	2.20	1.80	1.60	1.50
LL-DE-DA-S75-4-18-F-.188	7.00	6.00	4.50	3.90	3.30	2.40	1.60	1.00	0.80	0.60
LL-DE-DA-S75-4-20-S-.125	3.10	2.50	1.60	1.20	0.80	NR	NR	NR	NR	NR
LL-DE-DA-S75-4-20-F-.125	3.62	2.92	1.87	1.40	0.93	0.42	NR	NR	NR	NR
LL-DE-DA-S75-4-20-S-.188	5.50	4.70	3.40	2.90	2.40	1.70	1.30	1.00	0.90	0.80
LL-DE-DA-S75-4-20-F-.188	5.30	4.50	3.20	2.60	2.10	1.30	0.70	NR	NR	NR
LL-DE-DA-S75-4-22-S-.125	3.33	2.61	1.48	1.41	0.99	0.29	NR	NR	NR	NR
LL-DE-DA-S75-4-22-F-.125	3.03	2.31	1.18	1.11	0.70	NR	NR	NR	NR	NR
LL-DE-DA-S75-4-22-S-.188	4.20	3.50	2.30	1.90	1.40	0.80	0.60	NR	NR	NR
LL-DE-DA-S75-4-22-F-.188	5.93	4.90	3.26	3.18	2.58	1.58	0.81	0.20	NR	NR
LL-DE-DA-S75-4-24-S-.125	2.24	1.60	0.60	0.54	0.17	NR	NR	NR	NR	NR
LL-DE-DA-S75-4-24-F-.125	1.92	1.28	0.28	0.22	NR	NR	NR	NR	NR	NR
LL-DE-DA-S75-4-24-S-.188	3.10	2.40	1.40	1.00	0.60	NR	NR	NR	NR	NR
LL-DE-DA-S75-4-24-F-.188	4.46	3.54	2.11	2.03	1.50	0.62	NR	NR	NR	NR

LITELUME provides this information as a guide only and assumes no liability for its use. Allowable pole EPA for jobsite wind conditions must be equal to or greater than fixture mount EPA. Responsibility lies with the specifier for the correct pole selection based on A.N.S.I. wind map and job location.

©Lite Lume Corporation 2018

www.litelume.com
info@litelume.com
833.LED.LUME

LITELUME™ seeks to deliver the most advanced and efficient LED technology. Due to technology progression, specifications may change. We reserve the right to update product specifications without notice. Contact LITELUME™ for the most up-to-date data.

Style 75 Structural - Aluminum Pole

Made in USA - Delaware

WIND LOADING & DIMENSIONAL DATA

FLORIDA REGION WIND MAP

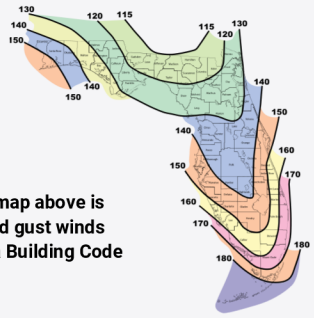

- **Florida region wind map above is based upon 3-second gust winds and the 2010 Florida Building Code**

Florida Building Code 2017 EPA Load Rating - 3 Second Gust Wind Speeds

MODEL #	115	120	130	140	150	160	170	180
LL-DE-DA-S75-4-10-S-.125	11.00	10.10	8.40	7.00	5.90	5.10	4.90	4.30
LL-DE-DA-S75-4-10-F-.125	10.45	9.60	7.98	6.65	5.61	5.00	4.30	3.70
LL-DE-DA-S75-4-10-S-.188	16.70	15.20	12.80	10.80	9.20	7.90	7.40	6.60
LL-DE-DA-S75-4-10-F-.188	15.87	14.44	12.16	10.26	8.74	7.51	7.03	6.27
LL-DE-DA-S75-4-12-S-.125	7.80	7.00	5.70	4.70	3.80	3.50	3.30	2.90
LL-DE-DA-S75-4-12-F-.125	7.41	6.65	5.42	4.47	3.61	3.10	2.60	2.10
LL-DE-DA-S75-4-12-S-.188	12.10	11.00	9.10	7.60	6.40	5.40	5.20	4.60
LL-DE-DA-S75-4-12-F-.188	11.50	10.45	8.65	7.22	6.08	5.13	4.60	3.90
LL-DE-DA-S75-4-14-S-.125	5.60	4.90	3.90	3.00	2.60	2.30	2.10	1.90
LL-DE-DA-S75-4-14-F-.125	5.32	4.66	3.71	2.85	2.40	1.80	1.30	0.90
LL-DE-DA-S75-4-14-S-.188	9.10	8.20	6.60	5.40	4.40	3.70	3.50	3.30
LL-DE-DA-S75-4-14-F-.188	8.65	7.79	6.27	5.13	4.18	3.52	2.90	2.40
LL-DE-DA-S75-4-16-S-.125	3.80	3.30	2.40	1.70	1.40	1.10	0.80	0.50
LL-DE-DA-S75-4-16-F-.125	3.61	3.14	2.28	1.62	1.33	1.05	0.76	0.48
LL-DE-DA-S75-4-16-S-.188	6.80	6.00	4.70	3.70	2.90	2.40	2.10	1.90
LL-DE-DA-S75-4-16-F-.188	6.46	5.70	4.47	3.52	2.76	2.28	2.00	1.81
LL-DE-DA-S75-4-18-S-.125	2.50	2.10	1.50	0.90	NR	NR	NR	NR
LL-DE-DA-S75-4-18-F-.125	2.38	2.00	1.43	0.86	NR	NR	NR	NR
LL-DE-DA-S75-4-18-S-.188	4.80	4.20	3.20	2.50	1.80	1.30	1.10	0.80
LL-DE-DA-S75-4-18-F-.188	4.56	3.99	3.04	2.38	1.71	1.24	1.05	0.76
LL-DE-DA-S75-4-20-S-.125	1.50	1.10	0.60	NR	NR	NR	NR	NR
LL-DE-DA-S75-4-20-F-.125	1.43	1.05	0.57	NR	NR	NR	NR	NR
LL-DE-DA-S75-4-20-S-.188	3.40	2.90	2.10	1.40	0.80	NR	NR	NR
LL-DE-DA-S75-4-20-F-.188	3.23	2.76	2.00	1.33	0.76	NR	NR	NR
LL-DE-DA-S75-4-22-S-.188	2.30	1.80	1.10	0.50	NR	NR	NR	NR
LL-DE-DA-S75-4-22-F-.188	2.19	1.71	1.05	0.48	NR	NR	NR	NR
LL-DE-DA-S75-4-24-S-.188	1.30	0.90	NR	NR	NR	NR	NR	NR
LL-DE-DA-S75-4-24-F-.188	1.24	0.86	NR	NR	NR	NR	NR	NR

LITELUME provides this information as a guide only and assumes no liability for its use. Allowable pole EPA for jobsite wind conditions must be equal to or greater than fixture mount EPA. Responsibility lies with the specifier for the correct pole selection based on A.N.S.I. wind map and job location.

©Lite Lume Corporation 2018

www.litelume.com
info@litelume.com
833.LED.LUME

LITELUME™ seeks to deliver the most advanced and efficient LED technology. Due to technology progression, specifications may change. We reserve the right to update product specifications without notice. Contact LITELUME™ for the most up-to-date data.

Style 75 Structural - Aluminum Pole

Made in USA - Delaware

SLEEVE OPTIONS

Sleeve (SLV) Smooth

SLEEVE PROVIDES SMOOTH TRANSITION APPEARANCE FROM POLE TO ARM

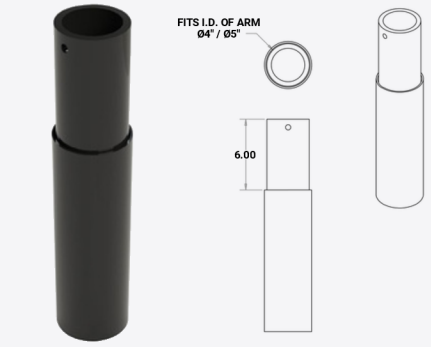

Sleeve (SLV) Fluted

SLEEVE PROVIDES SMOOTH TRANSITION APPEARANCE FROM POLE TO ARM

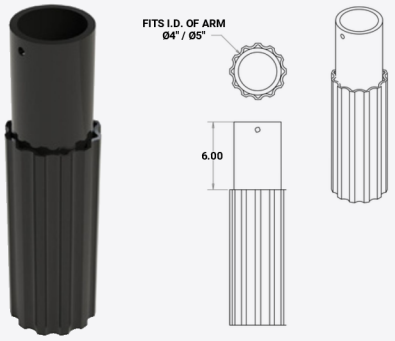

TENON OPTIONS

3" Tenon (T300)

3" TENON FOR MOST POST TOP & SMALLER ARM APPLICATIONS

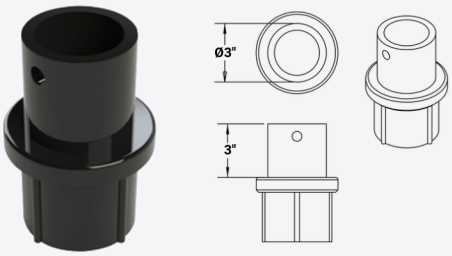

5 1/2" Tenon (T355)

5 1/2" TENON FOR MOST LARGER ARM APPLICATIONS

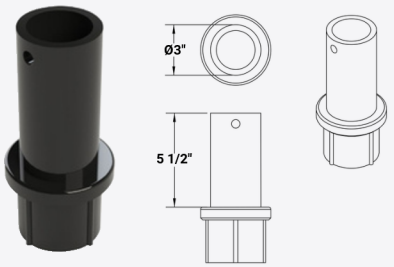

TENON ADAPTER (ORDERED SEPARATELY)

Round Tenon Adapter (TAR)

Square Tenon Adapter (TAS)

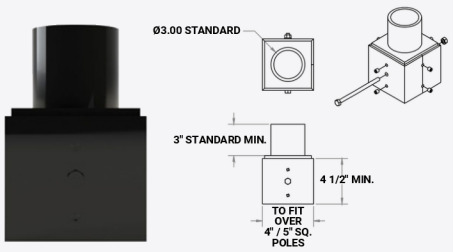

NOTE: The following information is needed when ordering Tenon Adapters:

• Size of fixture ID • Size of pole OD • If adapting to an existing tenon: provide length, width & height needed

©Lite Lume Corporation 2018

www.litelume.com
info@litelume.com
833.LED.LUME

LITELUME™ seeks to deliver the most advanced and efficient LED technology. Due to technology progression, specifications may change. We reserve the right to update product specifications without notice. Contact LITELUME™ for the most up-to-date data.

ACCESSORIES

GFI Covers

The GFI is supplied for mounting to an outlet opening, in the pole shaft, with a gasket and stainless steel screws (provided by others). Available in plastic (GFIP) or cast (GFIC).

Dual USB Port (USB)

*Photo is a representation. The exact USB may differ.

Direct Burial Shaft (DBS)

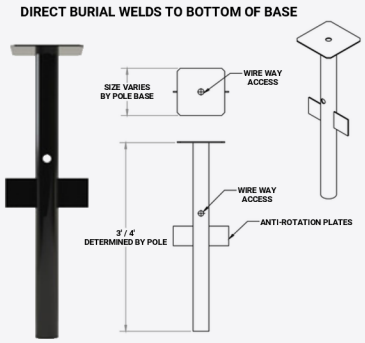

PLANT HANGER (ORDERED SEPARATELY)

Bolt On Plant Hanger (FH-BO)

Clamp On Plant Hanger (FH-CO)

Break-Away Plant Hanger (FH-BBA)

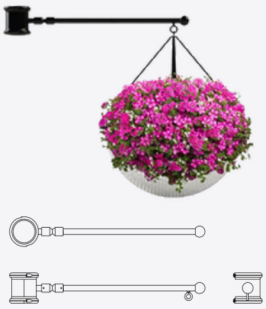

NOTE: Basket & Flowers Not Included.

EYEBOLTS (ORDERED SEPARATELY)

Clamp On Eye Bolt-Smooth (EB-CO)

Clamp On Eye Bolt-Fluted (EB-CO)

NOTE: Also Available in Bolt On.

©Lite Lume Corporation 2018
www.litelume.com
info@litelume.com
833.LED.LUME

LITELUME™ seeks to deliver the most advanced and efficient LED technology. Due to technology progression, specifications may change. We reserve the right to update product specifications without notice. Contact LITELUME™ for the most up-to-date data.

Style 75 Structural - Aluminum Pole

Made in USA - Delaware

FLAGHOLDER (ORDERED SEPARATELY)

Bolt On Flag Holder (FPH)

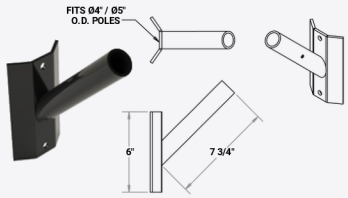

Clamp On Flag Holder-Smooth (FPH)

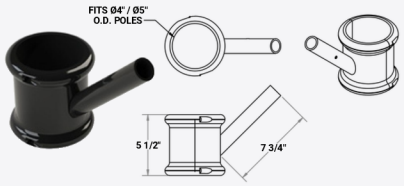

Clamp On Flag Holder-Fluted (FPH)

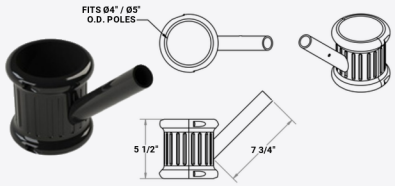

FINIAL CHOICE

PF1	PF2	PF3	PF4

POLE CAP

CAP	PF11	PF9	PF6	PF7	PF8
Standard When Ordering CAP	Custom	Custom	Custom	Custom	Custom

©Lite Lume Corporation 2018

www.litelume.com
info@litelume.com
833.LED.LUME

LITELUME™ seeks to deliver the most advanced and efficient LED technology. Due to technology progression, specifications may change. We reserve the right to update product specifications without notice. Contact LITELUME™ for the most up-to-date data.

ORIENTATION GUIDE

Orientation Chart

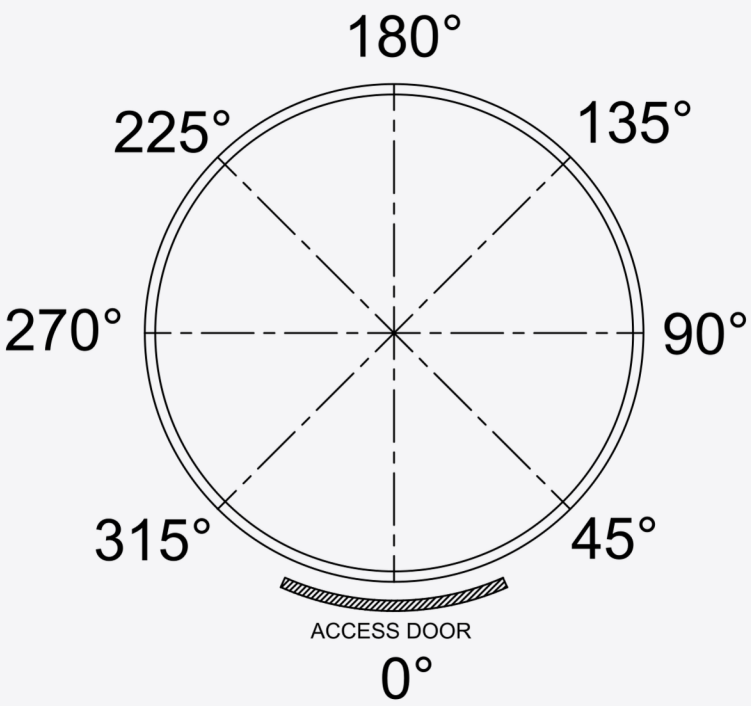

NOTE: All Placements at 0° Unless Otherwise Specified at Time of Order.

©Lite Lume Corporation 2018
www.litelume.com
info@litelume.com
833.LED.LUME

LITELUME™ seeks to deliver the most advanced and efficient LED technology. Due to technology progression, specifications may change. We reserve the right to update product specifications without notice. Contact LITELUME™ for the most up-to-date data.

Style 75 Structural - Aluminum Pole

Made in USA - Delaware

PROJECT NAME	
CATALOG #	
JOB TYPE	
PREPARED BY	
NOTES	

ORDERING GUIDE

Brand	Location	Type	Style
LL LITELUME	**DE** Delaware	**DA** Decorative Aluminum	**S75** Style 75

Diameter	Height	Pole Style	Wall Size
4 = 4" **4X3** = 4"x3" Tapered * * No Tenon Required * Smooth Shaft Only * Consult Factory for EPA Calculations	**8** = 8' * **10** = 10' **12** = 12' **14** = 14' **16** = 16' **18** = 18' * Not Available in Tapered **CONSULT FACTORY** for poles over 18' & up to 24'	**S** = Smooth **F** = Fluted	**Refer to Chart**

Tenon	Accessories	Finish	Anchor Bolts
N = None **T300** = 2⁷⁄₈"ODx3" Tall **T355** = 2⁷⁄₈"ODx5.5" Tall **CAP** = Removable Cap, No Tenon **SLV** = Male Sleeve Welded to Pole (Contact Factory) **PF_** = Decorative Finial (Choose One)	**N** = None **GFIC** = GFI In-Use Cover, Cast Aluminum * **GFIP** = GFI In-Use Cover, Plastic * **USB** = Dual USB Port * **DBS** = Direct Burial Shaft * Indicate Location	**POWDER COAT COLORS** **BK** - Black Powder Coat **WH** - White Powder Coat **DBZ** - Dark Bronze Powder Coat **DGR** - Dark Green Powder Coat **GY** - Gray Powder Coat **CUS** - Custom Color* * Provide RAL # or Sample Color Chip	Leave Blank If You Need Anchor Bolts **LAB** = Less Anchor Bolts (Customer Supplies Own Anchor Bolts) * * Customer is Responsible for Specifications of Their Own Anchor Bolts. LITELUME Does Not Assume Any Product Warranty Liability.

©Lite Lume Corporation 2018
www.litelume.com
info@litelume.com
833.LED.LUME

LITELUME™ seeks to deliver the most advanced and efficient LED technology. Due to technology progression, specifications may change. We reserve the right to update product specifications without notice. Contact LITELUME™ for the most up-to-date data.